TSMG series Manual Goniometer

T-Grade

AL 2024

Naming Rules:

TSM G -1W

G: Goniometer

Dimension position:
1W: Bottom
2W: Top

Selection Table:

Model	TSMG10-1W	TSMG10-2W
Travel(°)	±10	±10
Center Height(mm)	100	76
Table Size(mm)	65×65	
Thickness(mm)	24	
Load(Kg)	2	

Dimensions:

TSMG10-1W

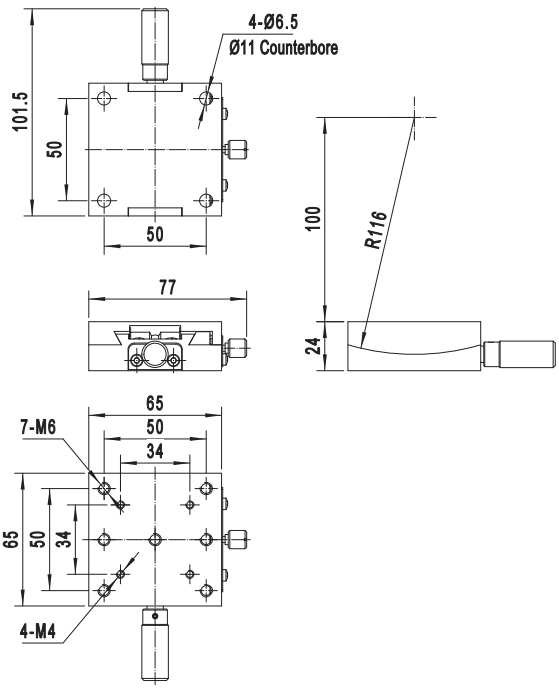
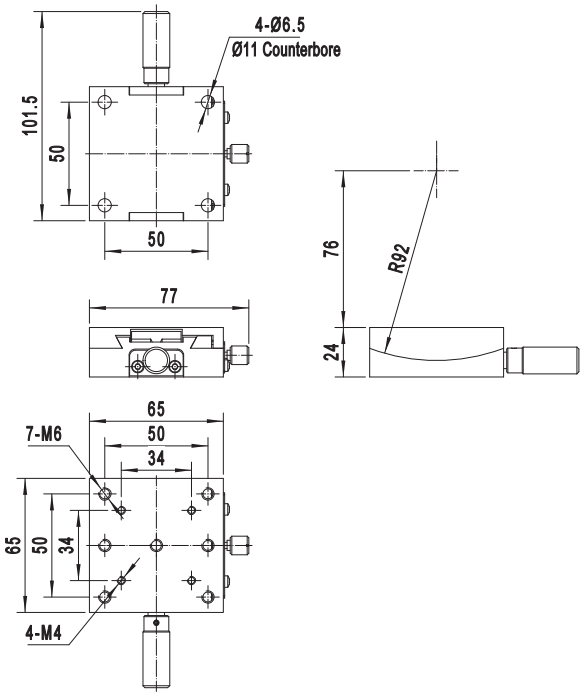
TSMG10-2W